LD SERIES

Classic HD Tilting Curved & Flat Panel Wall

LD3770-T

PRODUCT FEATURES:

- Supports curved and flat panel displays 37" to 70"
- Supports up to 165 lbs
- Easy grib knobs enable tilting down to 10°
- Open architecuture provides superior ventilation and easy access for wiring
- Integrated bubble level assures easy installation alignment
- Tilts down 10° with easy grip knobs

- Product Dimensions:
  46mm x 660mm x 440mm
- Supported VESA Patterns:
  200 x 200 • 400 x 200 • 300 x 300
  400 x 400 • 600 x 400
- Made of Steel

Specifications

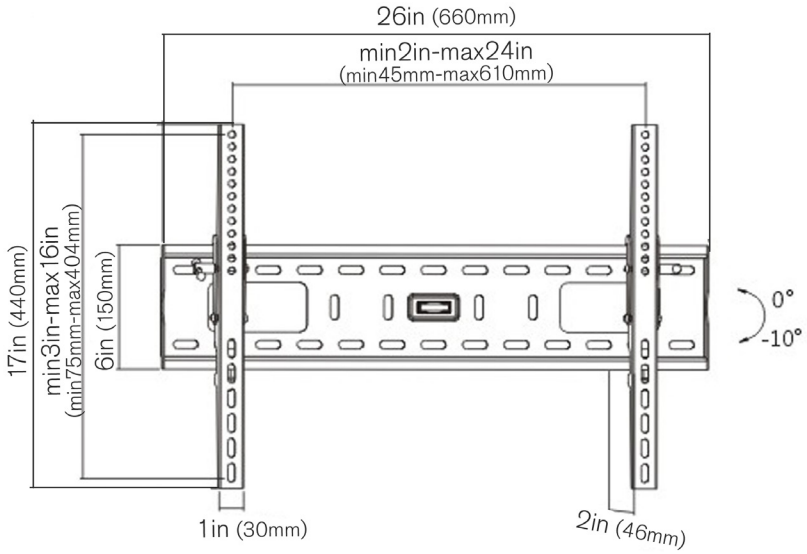

ERGOTECH
INNOVATIVE ERGONOMIC SOLUTIONS

For more information contact:
Marissa Rachjaibun
610.559.6336 • MarissaR@ergotechgroup.com
www.ergotechgroup.com